hygolet Disinfectant Dispenser

Ref/Art: 50.820D

1

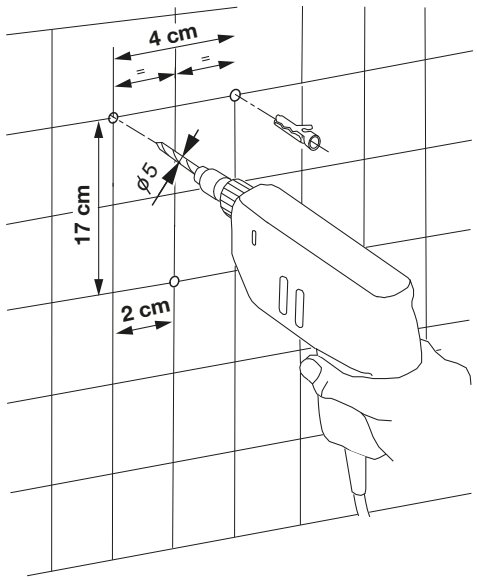

2

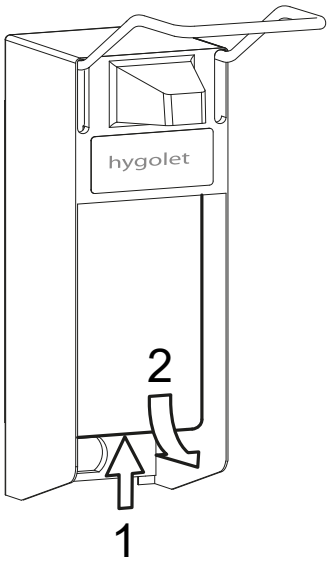

3

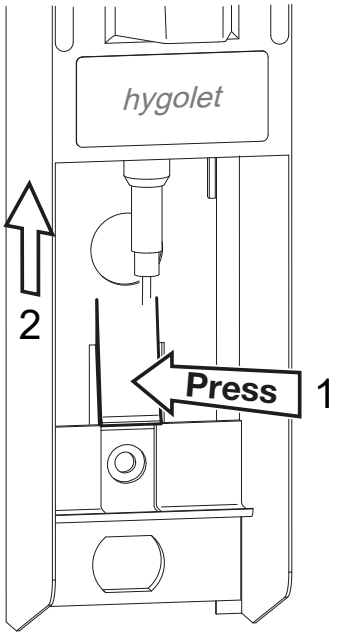

4

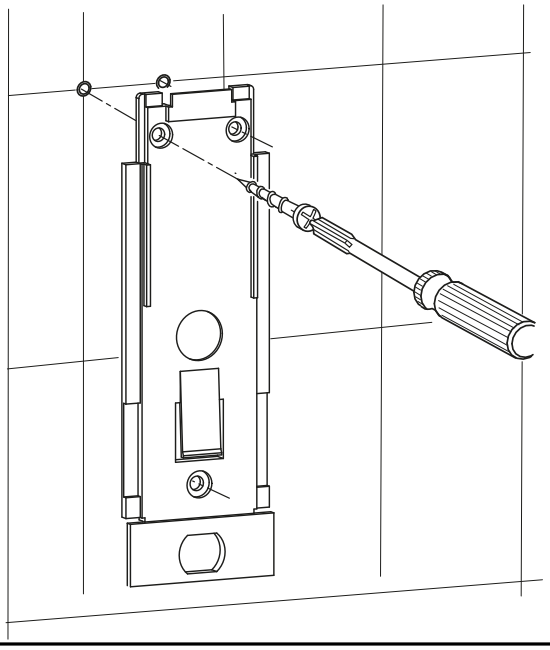

5

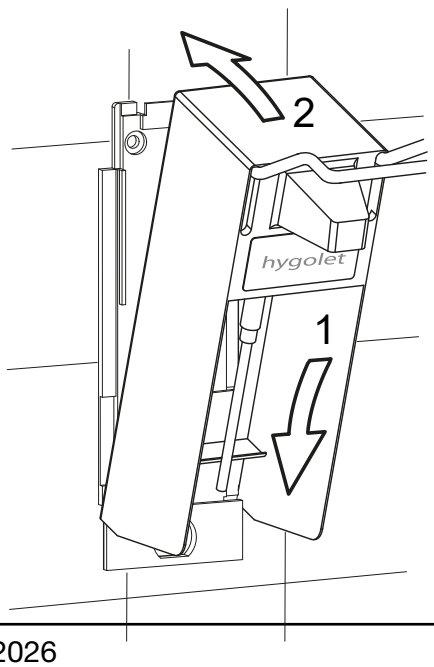

6

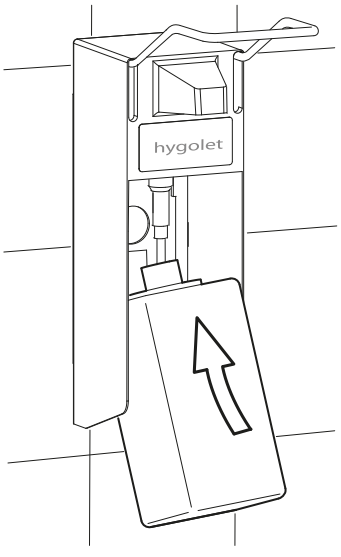

V01/2026